Integrating plastic technologies
since 1965

ROTARY SWITCHES

for Level Control

The Hamilton mini rotary switches are a durable weather tight solution for your level control needs. They are capable of being mounted in either a vertical or horizontal position.

Function is simple, a synchronous motor rotates the paddle at 1 RPM. When the paddle rotation is impeded by material surrounding the paddle, the motor will stall and cause the internal micro switch to change state.

APPLICATIONS

Ideal for powder or pellet applications for installation in Surge bins, Loader level control and Silos.

FEATURES:

- Motor torque is adjustable
- Motor is protected by a special clutch mechanism
- Double dust -proof with special oil-seal design
- Enclosure rating is IP-65
- Supply voltage 110VAC, 220VAC, 240VAC, 24VAC 50 / 60Hz
- Contact rating 3A/250VAC
- Top mounting, adjustable shaft length is available as a option
- High temperature rating (200°C)
- Screw or flange connection is available
- Various paddle designs can be applied in different applications
- Special specification can match customer's requirements

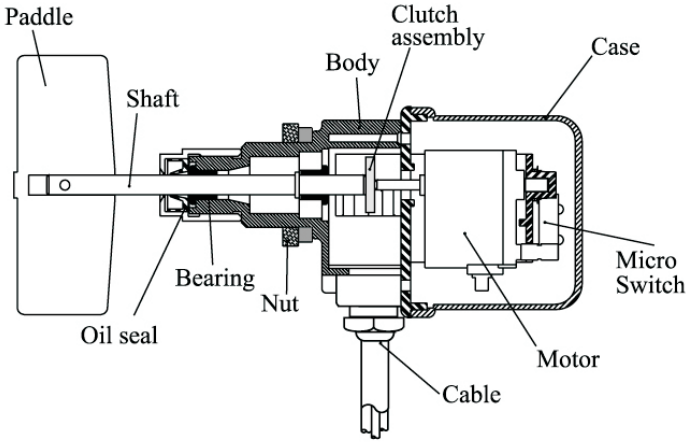

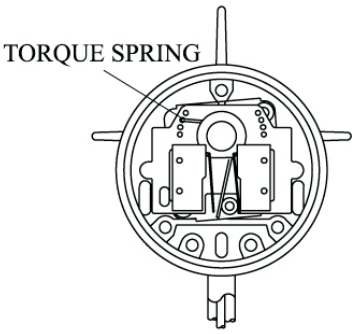

PN# 10.800.001

Cross type paddle
Horizontal mounting
Weight: 0.42 kg
Cable length: 1500 mm

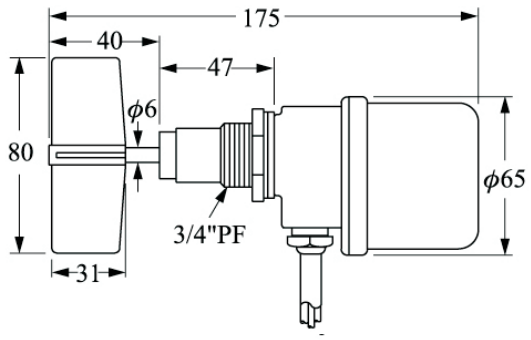

PN# 10.800.021

Curve type paddle
Horizontal mounting
Weight: 0.42 kg
Cable length: 1500 mm

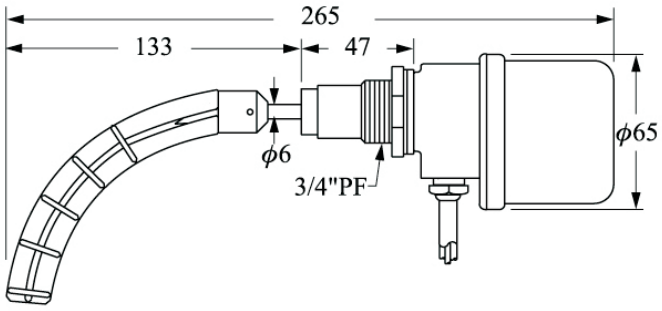

PN# 10.800.011

Straight type paddle
Horizontal mounting
Weight: 0.48 kg
Cable length: 1500 mm

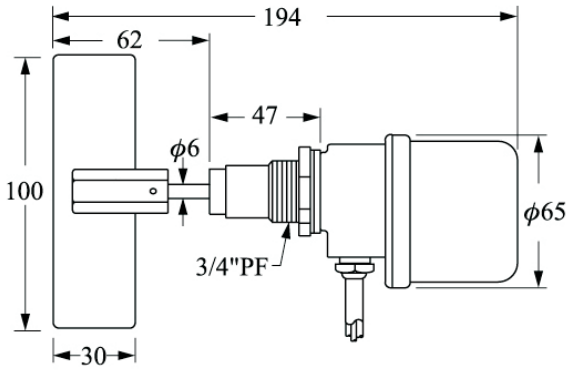

PADDLE TYPES

G

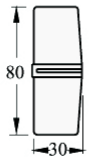

(G) **Cross type paddle**
Material: Polycarbonate

H

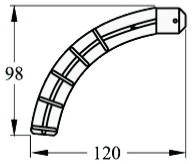

(H) **Curve type paddle**
Material: Polycarbonate

I

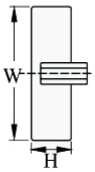

(I) **Straight Paddle**
100 x 30 mm (WxH)
Material: stainless steel

Hamilton Plastic Systems Ltd.
230 Brunel Rd., Mississauga, ON L4Z 1T5
905-890-0055 • 1-800-590-5546
sales@HamiltonPSL.com
www.hamiltonplasticsystems.com

Representative:

Integrating plastic technologies since 1965